NAFC Standard duty,Wider inner ring bearing, Eccentric locking



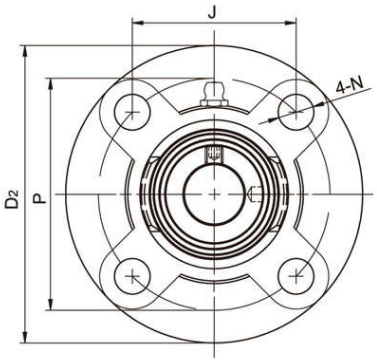

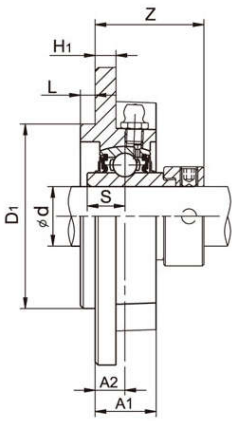

Unit No.	Shaft Dia d (in)	Shaft Dia d (mm)	D2	P	J	A2	N	L	H1	A1	D1	S	Z	Bolt Size (mm)	Weight (kg)
NAFC201S		12													
201-8S	1/2														
202S		15													
202-10S	5/8		90	70	49.5	10	10	4	5	19	55	13.9	33.4	M8	0.6
203S		17													
203-11S	11/16														
NAFC 201		12													
201-8	1/2														
202		15													
202-10	5/8														
203		17	100	78	55.1	10	12	5	7	20.5	62	17.1	36.5	M10	0.83
203-11	11/16														
204		20													
204-12	3/4														
NAFC 205		25													
205-14	7/8														
205-15	15/16		115	90	63.6	10	12	6	7	21	70	17.5	36.9	M10	1.0
205-16	1														
NAFC 206		30													
206-18	1-1/8														
206-19	1-3/16		125	100	70.7	10	12	8	8	23	80	18.3	40.1	M10	1.5
206-20	1-1/4														
NAFC 207		35													
207-20	1-1/4														
207-21	1-5/16		135	110	77.8	11	14	8	9	26	90	18.8	43.3	M12	1.8
207-22	1-3/8														
207-23	1-7/16														
NAFC 208		40													
208-24	1-1/2		145	120	84.8	11	14	10	9	26	100	21.4	45.9	M12	2.2
208-25	1-9/16														
NAFC 209		45													
209-26	1-5/8														
209-27	1-11/16		160	132	93.3	10	16	12	14	26	105	21.4	44.9	M14	2.8
209-28	1-3/4														
NAFC 210		50													
210-30	1-7/8		165	138	97.6	10	16	12	14	28	110	24.6	48.1	M14	3.3
210-31	1-15/16														
NAFC 211		55													
211-32	2														
211-34	2-1/8		185	150	106.1	13	19	12	15	30	125	27.8	56.6	M16	4.5
211-35	2-3/16														
NAFC 212		60													
212-36	2-1/4														
212-38	2-3/8		195	160	113.1	17	19	12	15	35	135	31	63.8	M16	5.7
212-39	2-7/16														
NAFC 213		65	205	170	120.2	16	19	14	15	36	145	34.3	67.6	M16	6.5
213-40	2-1/2														
NAFC 214		70	215	177	125.1	17	19	14	18	38	150	34.3	68.6	M16	7.2
214-44	2-3/4														
NAFC 215		75	220	184	130.1	18	19	16	18	39	160	37.3	72.8	M16	8
215-48	3														

http://www.ldk-bearings.com