LDK® Take Up Units

UCT300 Heavy duty,Wider inner ring bearing,Setscrew locking



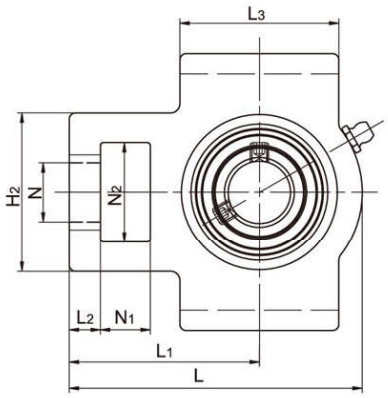

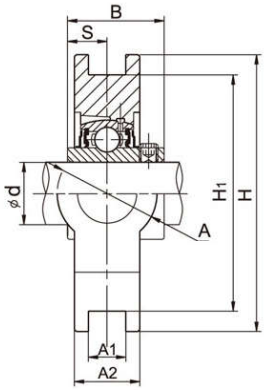

Unit No	Shaft Dia d(mm)	Dimensions(mm)															Weight (kg)
		N_1	L_2	H_2	N_2	N	L_3	A_1	H_1	H	L	A	A_2	L_1	B	S	
UCT305	25	16	12	62	36	26	65	12	80	90	122	36	26	76	38	15	1.41
UCT306	30	18	14	70	41	28	74	16	90	100	137	41	28	85	43	17	1.85
UCT307	35	20	15	75	45	30	80	16	100	111	150	45	32	94	48	19	2.45
UCT308	40	22	17	83	50	32	89	18	112	124	162	50	34	100	52	19	3.09
UCT309	45	24	18	90	55	34	97	18	125	138	178	55	38	110	57	22	4.08
UCT310	50	27	20	98	61	37	106	20	140	151	191	61	40	117	61	22	5.25
UCT311	55	29	21	105	66	39	115	22	150	163	207	66	44	127	66	25	6.41
UCT312	60	31	23	115	71	41	123	22	160	179	220	72	46	135	71	26	7.61
UCT313	65	32	25	116	70	43	134	26	170	190	238	80	50	146	75	30	9.22
UCT314	70	36	25	130	85	46	140	26	180	202	252	90	52	155	78	33	11.4
UCT315	75	36	25	134	85	46	150	26	192	216	262	90	55	160	82	32	12.9
UCT316	80	42	28	150	98	53	160	30	204	230	282	102	60	174	86	34	15.65
UCT317	85	42	30	152	98	53	170	32	214	240	298	102	64	183	96	40	19.34
UCT318	90	46	30	160	106	57	175	32	228	255	312	110	66	192	96	40	21.25
UCT319	95	46	31	165	106	57	180	35	240	270	322	110	72	197	103	41	24.4
UCT320	100	48	32	175	115	59	200	35	260	290	345	120	75	210	108	42	30.6
UCT321	105	48	32	175	115	59	200	35	260	290	345	120	75	210	112	44	30.2
UCT322	110	52	38	185	125	65	215	38	285	320	385	130	80	235	117	46	38.8
UCT324	120	60	42	210	140	70	230	45	320	355	432	140	90	267	126	51	54.6
UCT326	130	65	45	220	150	75	240	50	350	385	465	150	100	285	135	54	68.4
UCT328	140	70	50	230	160	80	255	50	380	415	515	155	100	315	145	59	83.2